KB1240 12V 40Ah

Kaise Battery series are Top terminal VRLA AGM battery for General use. With advanced manufacturing technique and industry scale, KB series delivers high energy density and high reliability performance, highly suited for UPS systems, security and alarm systems, telecommunication, utilities, emergency light systems, CATV and other backup applications.

12 V voltage | 40Ah capacity | AGM tech | 10 years design life

TECHNICAL SPECIFICATIONS

Nominal Voltage (V)	12 (6 cells per unit)
Designed Floating Life (25℃)	10 Years
Nominal Capacity (25℃)	40 Ah @ 10HR-rate (to 1.80Vpc)
Dimension (mm)	L196 x W165 x H170 x TH170
Approx. Weight	12.8kg (28.2 lbs)
Terminal Type	Female Copper Insert M6 (torque:6~8N.m)
Internal Resistance	Approx. 0.0095 Ohm (fully charged @ 20° C)
Max. Charge Current	9.5A
Max. Discharge Current (5S)	400A
Short Circuit Current	1250 A
Self Discharge	Approx. 3% per month @ 25° C
Ambient Temperature	Discharge: -20~55° C Charge: -20~50° C Storage: -20~45° C
Float Charge Voltage	13.6V/block @25℃ (-3mV/ cell/℃)
Equalize and cycle Use Charge Voltage	14.4V/block @25℃
Container Material	ABS (UL94-V0 optional)

Complied standards

- IEC 60896-21/22
- GB/T19638
- JIS C8704
- BS6290 part 4

BATTERY DIMENSIONS

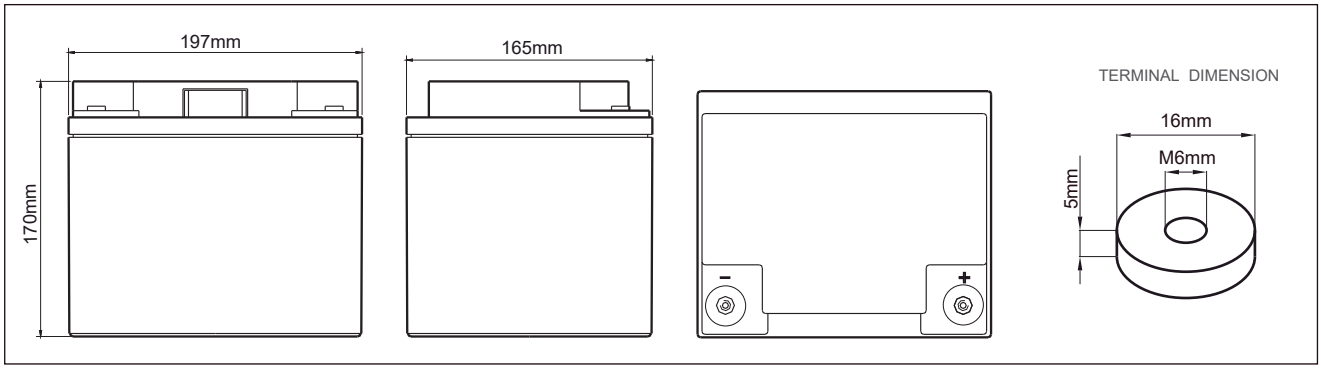

BATTERY DISCHARGE TABLE

Constant Current Discharge Characteristics: Amps (25°C)												
F.V /T ime	5 min	10 min	15 min	30 min	1h	2h	3h	4h	5h	8h	10h	20h
1.60 V	117.6	86.7	71.6	44.1	26.5	15.4	11.1	8.86	7.38	5.04	4.20	2.23
1.67 V	104.9	80.0	67.5	42.1	25.8	15.1	11.0	8.74	7.27	4.97	4.17	2.18
1.70 V	93.7	72.6	63.8	40.6	25.2	14.9	10.9	8.65	7.22	4.91	4.13	2.13
1.75 V	81.4	67.5	59.2	39.2	24.7	14.7	10.7	8.56	7.12	4.84	4.07	2.10
1.80 V	72.0	61.3	55.3	37.4	23.9	14.3	10.5	8.35	6.96	4.73	4.00	2.05
1.85 V	61.6	55.3	50.4	35.4	22.8	13.8	10.1	8.11	6.79	4.63	3.90	2.00

Constant Power Discharge Characteristics: W/cell (25°C)												
F.V /T ime	5 min	10 min	15 min	30 min	1h	2h	3h	4h	5h	8h	10h	20h
1.60 V	207	156	130	81.5	49.4	28.9	21.0	16.8	14.0	9.68	8.03	4.34
1.67 V	187	145	124	78.4	48.4	28.6	20.9	16.7	14.0	9.61	7.98	4.27
1.70 V	170	133	119	76.0	47.6	28.4	20.8	16.7	13.9	9.56	7.93	4.21
1.75 V	149	125	111	74.0	46.9	28.1	20.6	16.6	13.9	9.51	7.88	4.16
1.80 V	133	116	105	71.4	45.9	27.8	20.4	16.4	13.6	9.36	7.79	4.11
1.85 V	116	105	96.1	68.1	44.3	27.0	19.9	16.0	13.4	9.21	7.63	4.04

Kaise®

CHARACTERISTICS

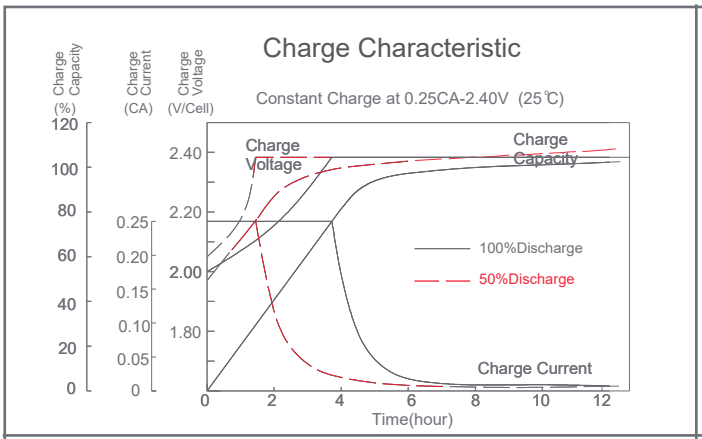

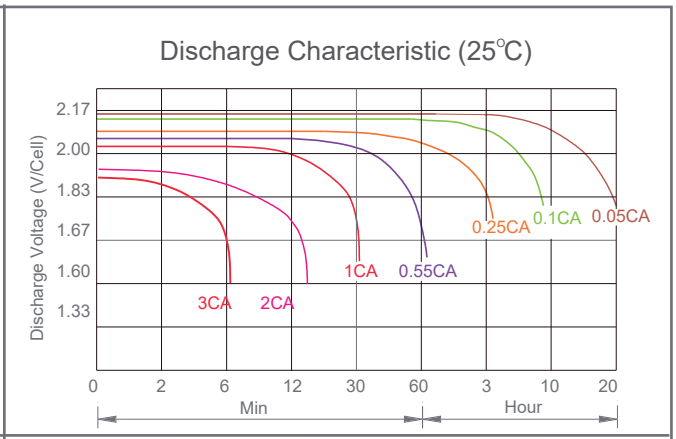

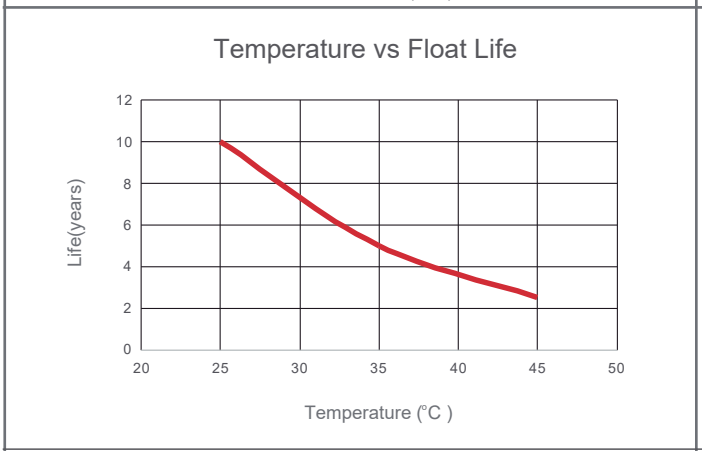

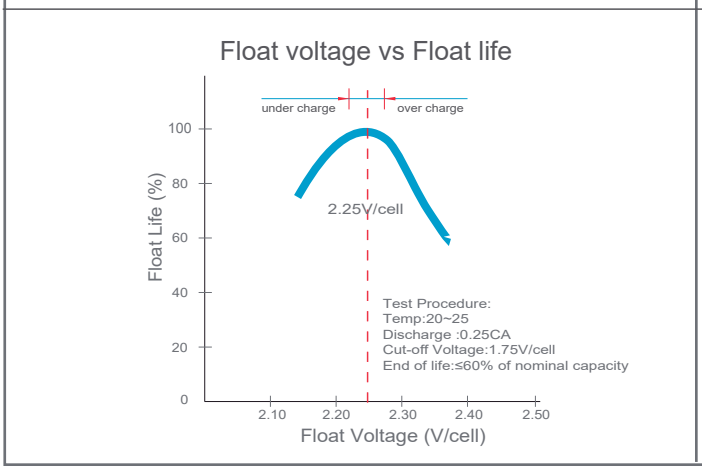

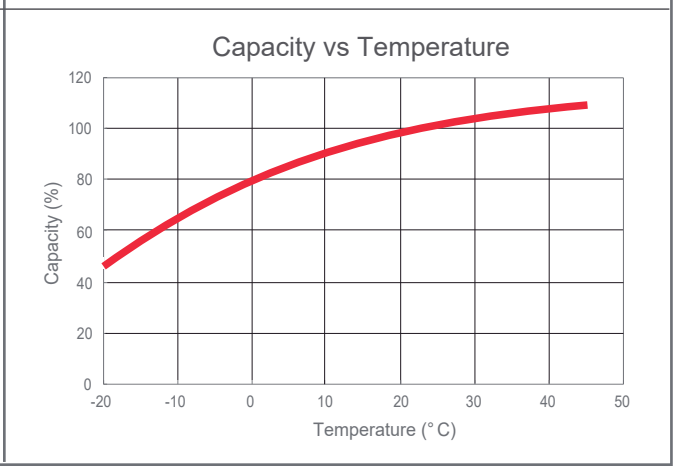

FINAL VOLTAGE SETTINGS RECOMMENDED ACCORDINGTOTHE DISCHARGE CURRENT

Discharge Current I (A)	I ≤0.08C	0.08C≤I<0.2C	0.2C≤I<0.6C	0.6C≤I<1.0C	I≥1.0C
Final of Voltage	≥1.85Vpc	≥1.80Vpc	≥1.75Vpc	≥1.70Vpc	≥1.60Vpc

KB1240-EN 2018 subject to technical modification. E.&O.E.

TEMPEL GROUP ARGENTINA
www.tempelgrouplatam.com
baires@tempelgroup.com
Tel.+54 11 4897-7184/7178

TEMPEL GROUP en el mundo
BUENO AIRES · MADRID · VALENCIA · BILBAO · SEVILLA · LISBOA · PORTO · LIMA · SÃO PAULO · SANTIAGO DE CHILE · BOGOTÁ · CIUDAD DE MÉXICO · CIUDAD DE PANAMÁ · MONTEVIDEO · QUITO

tempel group